Current part is item (13) on diagram. Available at www.oshkoshequipment.com

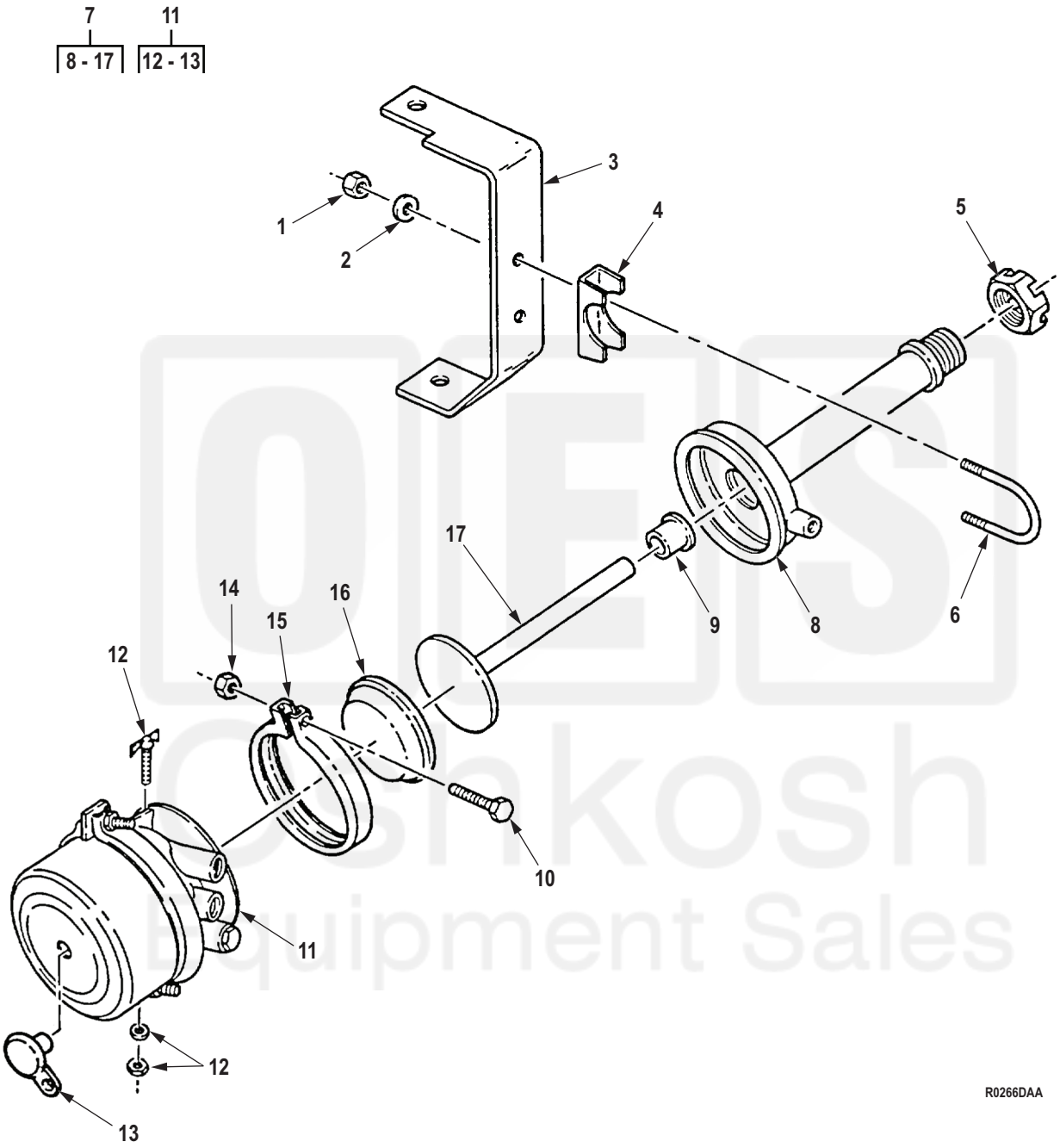

Figure 250. Rear Axle Fail-Safe Brake Chamber Assembly.

Current part is item (13) on diagram. Available at www.oshkoshequipment.com

Current part is item (13) on diagram. Available at www.oshkoshequipment.com

(1) ITEM NO.	(2) SMR CODE	(3) NSN	(4) CAGEC	(5) PART NUMBER	(6) DESCRIPTION AND USABLE ON CODE (UOC)	(7) QTY
8	XAFZZ		78500	A4-3280-F-5232	. HOUSING,NON-PRESS BRAKE CHAMBER UOC: DAC,DAD,DAE,DAF,DAG,DAH,DAJ,DAL,DAW,DAX,V14,V15,V16,V17,V18,V19,V20,V21,V22,V24,ZAA,ZAB,ZAC,ZAD,ZAE,ZAF,ZAG,ZAH,ZAJ,ZAL	1
9	PAFZZ	2530-00-087-0163	78500	1779-Q-433	. GUIDE,BRAKE ASSEMBL PUSH ROD UOC: DAC,DAD,DAE,DAF,DAG,DAH,DAJ,DAL,DAW,DAX,V14,V15,V16,V17,V18,V19,V20,V21,V22,V24,ZAA,ZAB,ZAC,ZAD,ZAE,ZAF,ZAG,ZAH,ZAJ,ZAL	1
10	PAFZZ	5306-00-498-7209	78500	15X725	. BOLT,SPECIAL RIM CLENCHING CLAMP UOC: DAC,DAD,DAE,DAF,DAG,DAH,DAJ,DAL,DAW,DAX,V14,V15,V16,V17,V18,V19,V20,V21,V22,V24,ZAA,ZAB,ZAC,ZAD,ZAE,ZAF,ZAG,ZAH,ZAJ,ZAL	1
11	PAFZZ	2530-01-134-3417	78500	A-3280-E-6817	. HOUSING ASSEMBL,BRA BRAKE CHAMBER UOC: DAC,DAD,DAE,DAF,DAG,DAH,DAJ,DAL,DAW,DAX,V14,V15,V16,V17,V18,V19,V20,V21,V22,V24,ZAA,ZAB,ZAC,ZAD,ZAE,ZAF,ZAG,ZAH,ZAJ,ZAL	1
12	PAFZZ	2530-01-095-3561	06721	9999036	. . STUD ASSEMBLY,RELEA HOUSING UOC: DAC,DAD,DAE,DAF,DAG,DAH,DAJ,DAL,DAW,DAX,V14,V15,V16,V17,V18,V19,V20,V21,V22,V24,ZAA,ZAB,ZAC,ZAD,ZAE,ZAF,ZAG,ZAH,ZAJ,ZAL	1
13	PAFZZ	2530-01-084-6975	98171	9999039	. . PLUG,CHAMBER TOP FAIL SAFE HOUSING UOC: DAC,DAD,DAE,DAF,DAG,DAH,DAJ,DAL,DAW,DAX,V14,V15,V16,V17,V18,V19,V20,V21,V22,V24,ZAH,ZAJ,ZAL	1
14	PAFZZ	5310-00-177-1258	3D6E9	N35P	. NUT,PLAIN,HEXAGON RIM CLENCHING CLAMP UOC: DAC,DAD,DAE,DAF,DAG,DAH,DAJ,DAL,DAW,DAX,V14,V15,V16,V17,V18,V19,V20,V21,V22,V24,ZAA,ZAB,ZAC,ZAD,ZAE,ZAF,ZAG,ZAH,ZAJ,ZAL	1

Current part is item (13) on diagram. Available at www.oshkoshequipment.com